GmbH BMR®

The Sign of Quality

Made in Germany

SFU 0156

Schnellfrequenzumrichter
High Frequency Converters

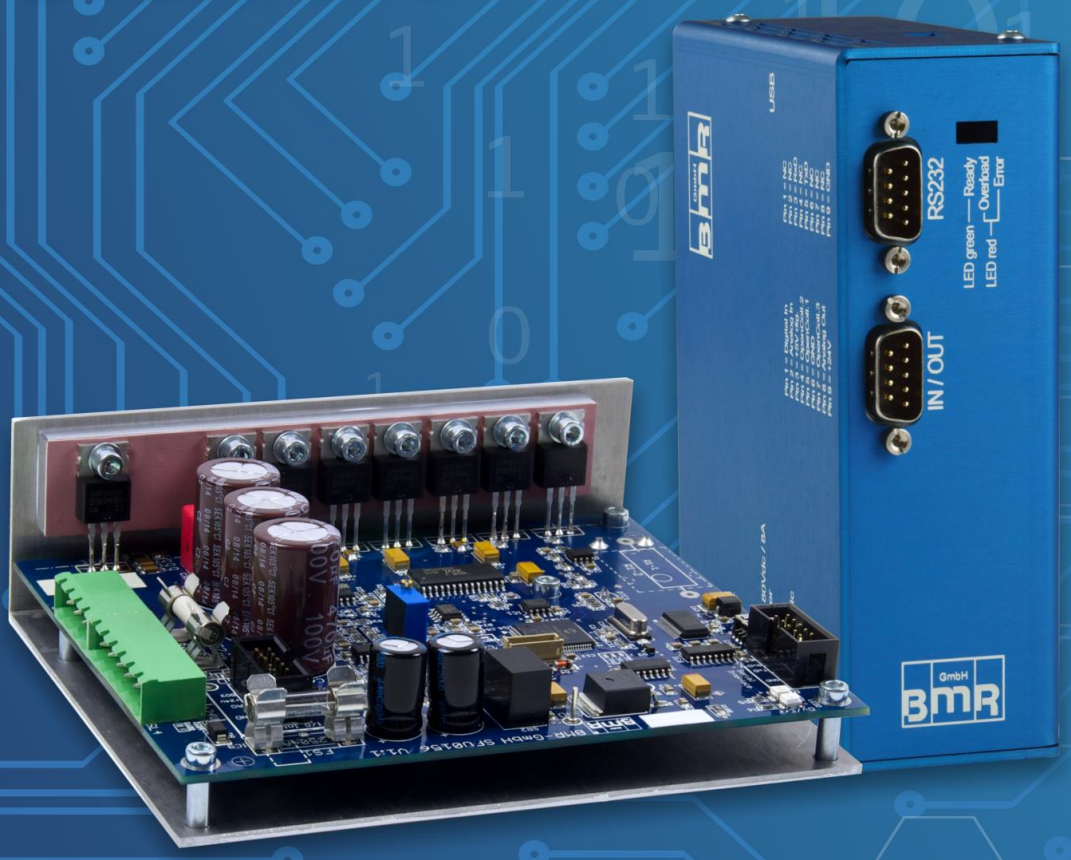

HIGH QUALITY
100%
MADE IN GERMANY
EXCELLENT SERVICE

CONTENT
Issue December 2019

1 Description and Features 2

2 Technical Data 2

3 Safety and Caution Instructions 3

4 Connections, Plugs and PIN Assignments open frame 4

- 4.1 Power Supply Connection SL4 4
- 4.2 Spindle Connection SL3 5
- 4.3 Inputs und Outputs SL2 5
- 4.4 USB Interface 5
- 4.5 Serial Interface SL5 6
- 4.6 Adapter Cable 6

5 Connections, Plugs and PIN Assignments open frame 4

- 5.1 Power Supply SL4/ Spindle Connection SL3 7
- 5.2 Inputs und Outputs SL2 8
- 5.3 USB Interface / Serial Interface SL5 8

6 Description of Functions and Operation 7

- 6.1 Start and Stop 9
- 6.2 Set Value of Rotational Speed 9
- 6.3 Outputs 9
- 6.4 LED‘s 10

7 Example for I/O Wiring 10

8 Safety Functions 11

9 EMC 11

10 Power Supply Set (as option) / Version ISM 12

11 Remote Control 14

12 Drawing and Mounting 15

1. Description and Features

- ✓ Operation of **AC spindles** and **BLDC spindles**
- ✓ The frequency converter **SFU 0156** allows **speed frequencies** up to **4000Hz/240.000 rpm** with 2-pole AC spindles.
- ✓ The core of SFU-0156 is a **digital signal processor** (DSP) which produces all output parameters and collects signals.
- ✓ **High-precision sinusoidal** output signals with a low distortion factor and low deformation allow for optimal rotation qualities in AC motors of all operating conditions
- ✓ All parameters like power, voltage and frequency are collected in **real time** and are regulated by the implemented vector control depending on the load.
- ✓ High **operating safety:** All operating conditions like acceleration, operation with nominal rotation speed, braking are controlled and critical conditions are intercepted.
- ✓ **Short circuit protected**
- ✓ **on board chopper resistor**
- ✓ **Protection against excess temperature.**

2. Technical Data

Power Supply	Logic: Spindle:	24V / 0,25 A DC (18V…30V) max. 85V / 8A DC - pluggable screw terminals 4mm²
Fuses	FS1: FS2:	T250mA, recommended: Littlefuse 0477.500XP T6,3A recomm.: Littlefuse 0477 06.3XP/SIBA 179200 6,3
Continuous output power	640VA / S1 100%	
Spindle Connection	4-pin:	U, V, W, PE - pluggable screw terminals 4mm²
Output Voltage	depending on the spindle characteristic: max. 55V	
Output Current	electronically limited and matched to the corresponding spindle	
Output Frequency	AC: 4.000 Hz / max. 240.000 rpm DC: 1.667 Hz / max. 100.000 rpm	
Control Inputs	Digital In: Analogue In:	Start / Stop (0 / 24V) "0": 0..7V, "1": 18..24V Set Value Rotational Speed (0…10V)
Control Outputs	Digital out: Analogue Out:	free configuration: open collector 45V/0,5A Output Load (0…10V)
Operating Status Indicators	Converter ready: LED green / Error: LED red	
Interface	RS232 Interface: 115.200Bd, 8 Data, 1 Stop Bit, No Parity USB Interface (USB-Mini)	
Dimensions (L x B x H mm)	open frame 132 x 111 x 42 mm / SSE 123 x 45 x 136	
Copper Resistor	47Ohm / 10W	
Operating Conditions	5 - 40°C / rel. humidity of air max. 85%	

3. Safety-Precautions and Warnings

- ✓ This device produces dangerous electrical voltages and is used for the operation of fast spinning tools. Because of their high rotational speed, it may be dangerous in case of improper handling. For this reason, only professionally trained and qualified personnel should be allowed to work with and setup this device!
- ✓ Before the first commissioning can be carried out, it should be ensured that the spindle and the tool are fixed properly, to eliminate all dangers because of uncontrolled movement of the spindle.
- ✓ Safety regulations being valid for the country where the device is used, have to be adhered to where any work is carried out on the device.
- ✓ Before the device is turned on for the first time, it should be verified, that the connected parts cannot carry out uncontrolled movements.
- ✓ The frequency converter must not be operated close to heating devices or magnets or devices generating strong magnetic fields.
- ✓ Sufficient air circulation around the converter should be ensured.
- ✓ Fluids should be prevented from intruding into the housing. If it seems to be happened, the converter has to be switched off immediately.
- ✓ The ambient air must not use aggressive, flammable or electrically conductive substances and should be as free of dust as possible.
- ✓ All repairs and maintenance on the converter and the relating accessories must be carried out by skilled personal and with powered off, only. To ensure this, the mains plug should be pulled out. In doing this, both the terms of regulations for preventing accidents and the general and national rules for mounting and safety have to be applied.
- ✓ Do not open this device while it is connected to power supply. There is danger of life! With opening this unit the period of warranty will be ended.
- ✓ All people who work with this device should be trained and instructed by their line advanced technician.

Attention:
Please verify that all power supply voltages are correct in polarity and value

Attention:
Please ensure to have the proper characteristic selected, always!
The operation of a spindle with a wrong characteristic may harm the spindle severely!

Attention:
In case of replacing the fuses, please ensure to use types only, which are mentioned in 'Technical Data'!

4. Connections, Plugs and PIN Assignments open frame

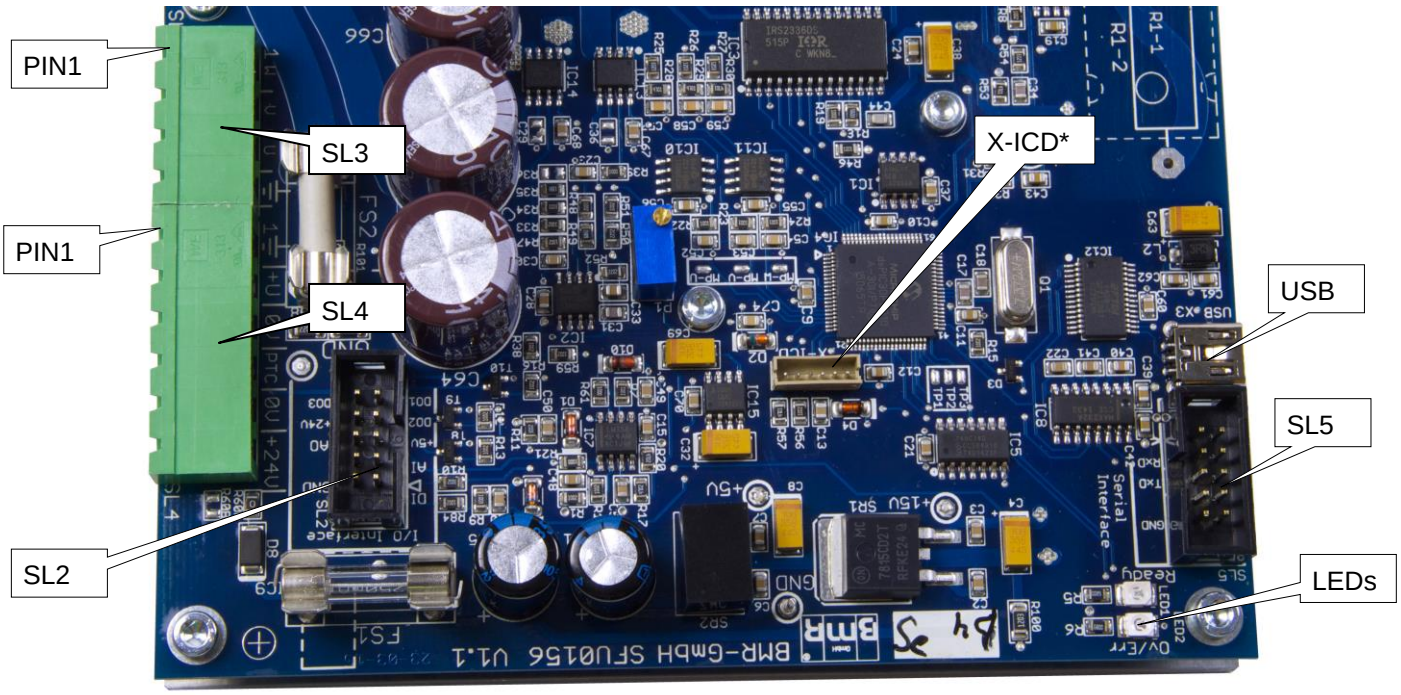

* X-ICD for internal use only

4.1 Power Supply Connection SL4 (pluggable screw terminals)

Pin	Function	Description
1	PE	Protective Earth, is internally connected to mounting bracket
2	+80V_{DC}	+ Supply Voltage for spindle -> Fuse FS2 6,3 AT
3	0V (80V)	Voltage return for spindle supply
4	PTC / KTY / PT1000	Temp sensor Spindle -> available at HW V1.1 and to be configured with SFU-Terminal >V6.25
5	0V (24V)	Voltage return for controller supply (internally connected with PIN3)
6	+24V (max 30V)	+ Supply voltage for control logic -> Fuse FS1 250mAT protected against voltage reversal with Diode D8
	NC	Version SFU 0156 with onboard +24V logic supply. In this version the logic supply voltage is directly generated from the spindle supply voltage (-> 9.)

4.2 Spindle Connection SL3 (pluggable screw terminals)

Pin	Function	Description
1	W	Spindle Phase W
2	V	Spindle Phase V
3	U	Spindle Phase U
4	PE	Protectiv Earth of spindle and cable shield

4.3 Inputs and Outputs - I/O Interface SL2 (2.54mm Header)

Pin	Function	Description
1	DI (Digital Input)	Start / Stop
3	AI (Analog Input)	Set value for rotational speed
2,4	Ground	Ground Ref. for Pin 1, 3, 5, 7, 8, 9, 10 (internally connected withSL4.3/5)
5	+5V /10mA $_{max.}$	auxiliary supply [1]
6	AO (Analog Out)	Output 0…10V (free configuration) **Load Percent**
7	DO2 Open Collector2	Output (for free configuartion) **Overload**
8	+24V / 10mA $_{max.}$	auxiliary supply [1] (internally connected with SL4.6)
9	DO1 Open Collector1	Output (for free configuartion) **Converter Ready**
10	DO1 Open Collector3	Output (for free configuartion) **Duty Speed reached**

The scaling of the analog input can be modified, as well as the function of the open collector outputs can be defined freely. The noted functions are the factory default setup.

On option a remote controller is available which can be connected directly with the I/O interface at SL2. (→10).

4.4 USB Interface (alternative with RS232 → 4.5)

The SFU 0156 has an USB Mini connector for easy access with "SFU-Terminal" configuration program. You have the options to setup and configure the converter. The USB interface is using the same interface channel as the RS232 interface (4.5) so that either one of both can be used, only.

4.5 Serial Interface RS232 SL5 (2.54 mm Header) (alternative with USB →4.4)

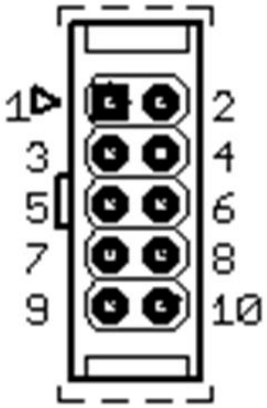

Pin	Funktion
1, 2, 4, 6, 7, 8	NC
3	RxD
5	TxD
9	GND
10	NC

4.6 Adapter-Cable for SL2 and SL5

For easy connection to SL2 and SL5 a standard(2) ribbon cable connector with Dsub9 fem is available as option.

List for Adapter-Cable SL2:

D-Sub-Pin	SL2-Pin	Function SL2
1	1	Digital Input1
2	3	Analog Inpu1
3	5	+5Vdig (1)
4	7	Open Collector 2
5	9	Open Collector 1
6	2	GND
7	4	GND
8	6	Analog Out
9	8	+24V (1)
7	10(2)	Open Collector 3

List for Adapter-Cable SL5:

D-Sub-Pin	SL5-Pin	Function SL5
1	1	
2	3	RxD
3	5	TxD
4	7	
5	9	GND
6	2	
7	4	
8	6	
9	8	

(1) Attention, with using and wiring these auxiliary voltages particular care is required and lies under the responsibility of the user! These voltages may be used as auxiliary voltage but are not especially fused. +24V is directly connected to FS1 and +5Vdig is directly connected with the DSP and all other ICs. So, potential errors at the wiring may harm the board severely!

(2) Attention, on request a non standard cable is available with a special wiring makes OC3 accessible at PIN7 of the 9PIN D-Sub.

5. Connections, Plugs and Pin Assignments (SSE)

Side view

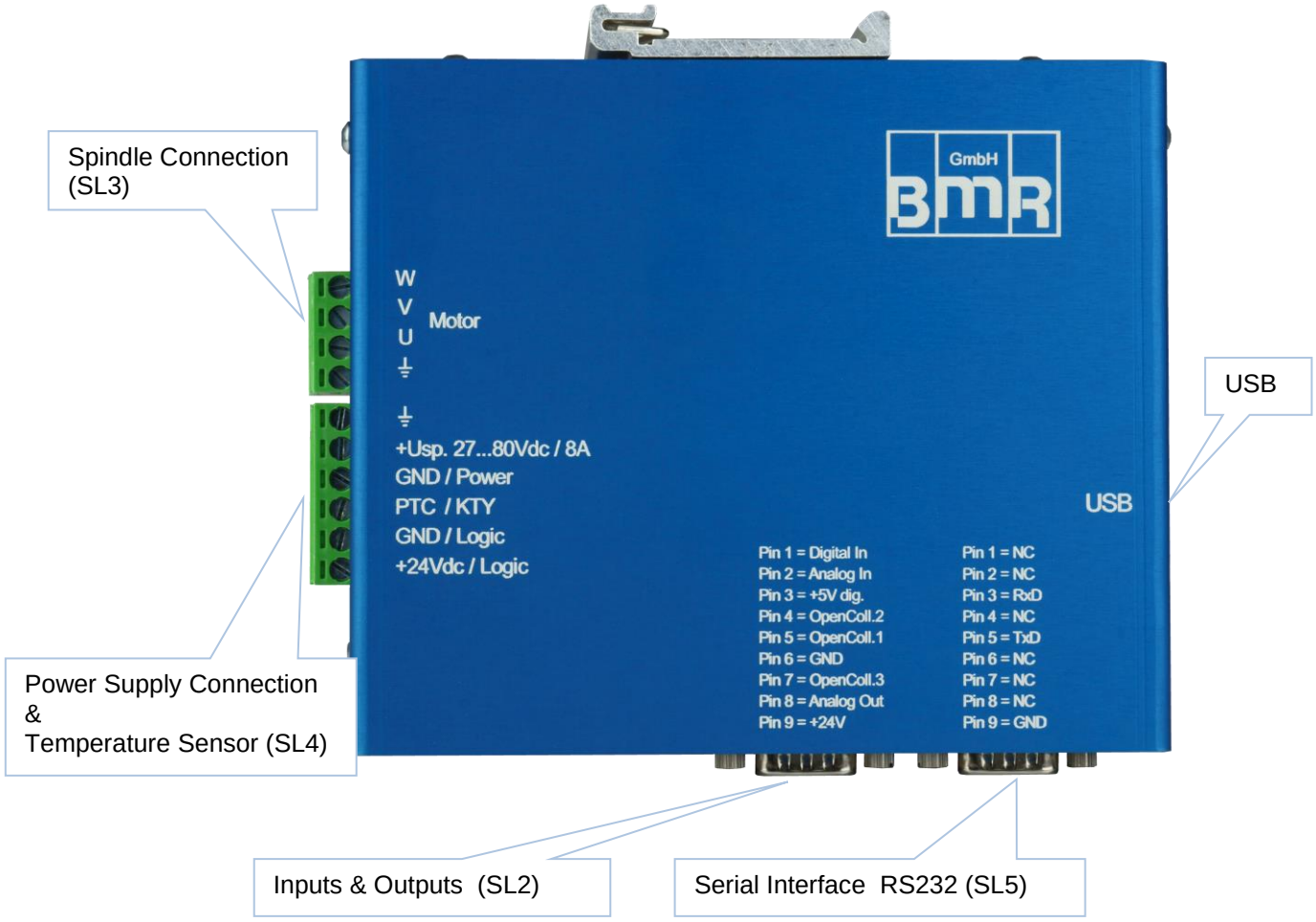

5.1 Spindle Connection and Power Supply

Bottom view

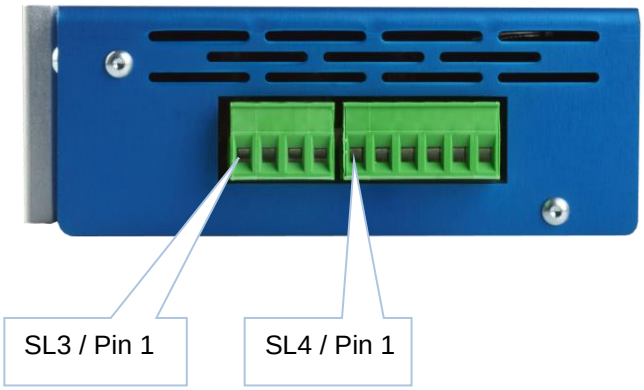

Pinout for Spindle Connection see see 4.2 (Table).

Pinout for Power Supply Connection see 4.1 (Table).

5.2 Inputs and Outputs / I/O Interface (SL2)

Pinout for I/Os see 4.6 (Table)

Front view

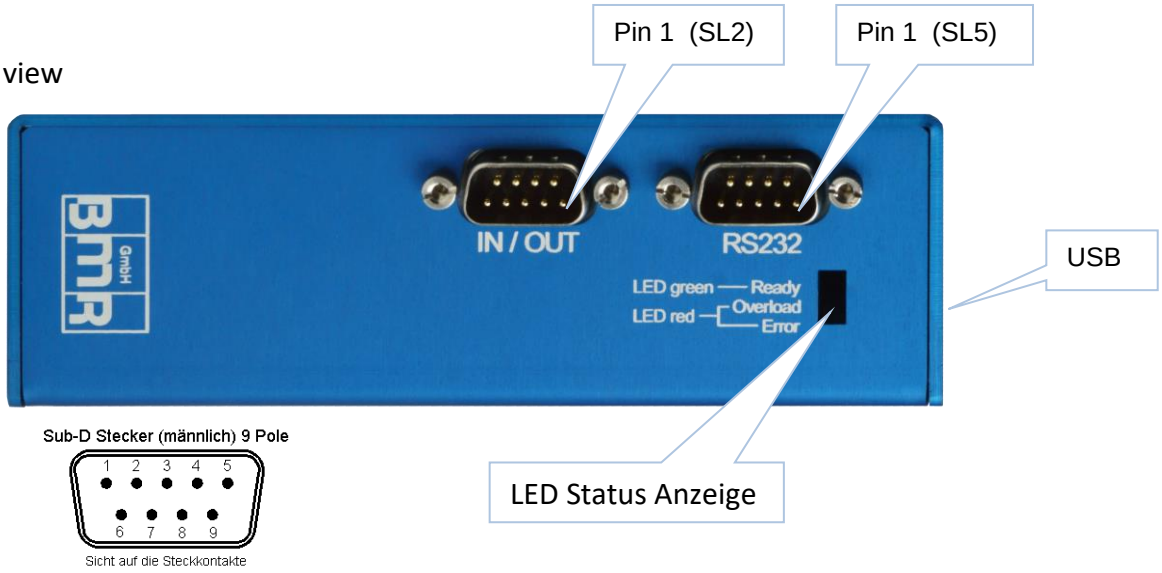

5.3 Serial Interface RS232 (SL5) and USB Connection

Pinout for serial Interface RS232 (SL5) see 4.6 (Table)

The USB interface shares the functionality with the serial interface (4.5). For that reason it can be used **alternatively.**

The converter can be controlled via both interfaces. The control commands is available on the BMR website

For communication via USB a Mini-USB cable can be used

For communication via the RS232 Interface a Zero modem cable (crossed RXD-TXD) can be used in conjunction with the ribbon cable adapter

Note:

The setup and parameterization software **SFU-Terminal** is free available on the BMR website. It is very helpful for testing and setup purpose.

6. Funktionsbeschreibung, Inbetriebnahme, Bedienung

6.1 Start / Stop

There are two possibilities to start the spindle:

digitally with a digital control signal at digital input1 **Start/Stop** at SL2.1.
The switching levels for "OFF=0" are 0...7V and for "ON=1" 18...24V,
voltages between 7V and 18V are undefined.

➔ As soon as this is initiated, the spindle will be accelerated to the set value of the rotational speed which is pre-selected as voltage at analogue input1 **Set Value of Rotational Speed** at SL2.2.

analogue with a voltage at analogue input1
Precondition is a valid "ON" signal at digital input1 **Start/Stop**

➔ An input voltage of 0V makes the spindle stop, and a voltage higher than 0,29V starts the spindle up to a rotational speed according to the scaling.

6.2 Set Value of Rotational Speed

There are two possibilities for scaling the rotational speed:

0-10V / Min-Max: The default scaling for the analogue value is according the Min/Max values of the rotational speed from the spindle characteristice.g.: set values are
Min: 5.000rpm, Max: 60.000
This results in a formula for the control voltage u: u = set value * 10V/60.000rpm
A voltage of u<0,8V realizes standstill, a voltage of 0,8V sets the minimum speed of 5.000rpm and 10V sets the maximum rotational speed of 60.000rpm.

Another option of the input scaling is **1V/10.000rpm**.

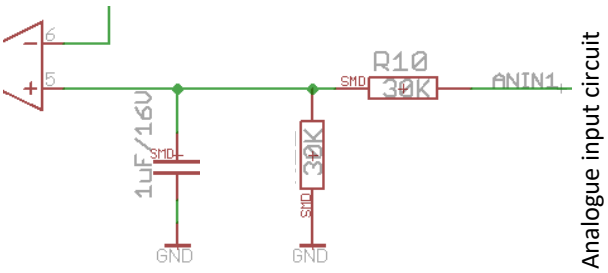

Analogue input circuit

6.3 Outputs

Digital Outputs:

As feedback signals to a PLC or another control there are 3 open collector outputs available. They indicate the current operational status of the converter. (→ 6.)
The functions can be setup freely, factory default is listed below

DO1 / SL2.9	default **Converter Ready**	In this case, the PIN is drawn to ground
DO2 / SL2.7	default **Overload**	In this case, the PIN is drawn to ground
DO3 / SL2.10	default **Duty speed reached**	In this case, the PIN is drawn to ground

Analogue Output:

As a default function the output load condition is output as a voltage between 0..10V at the analogue output AO / SL2.6. with a scaling of 1V/10% . Other function values are available and can be setup with SFU-Terminal.

6.4 LEDs

Likewise the open collector outputs, there are LEDs indicating the current operational status of the converter.

Green	Red	Function
Off	Off	Converter not ready
On	Off	Converter ready
On	On	Overload or Error Warning
Off	On	Converter not ready, switch off because of Error
Off	blinking	internal Error
ON	blinking	STALL Error in startup procedure or load case

7. Example for I/O Wiring

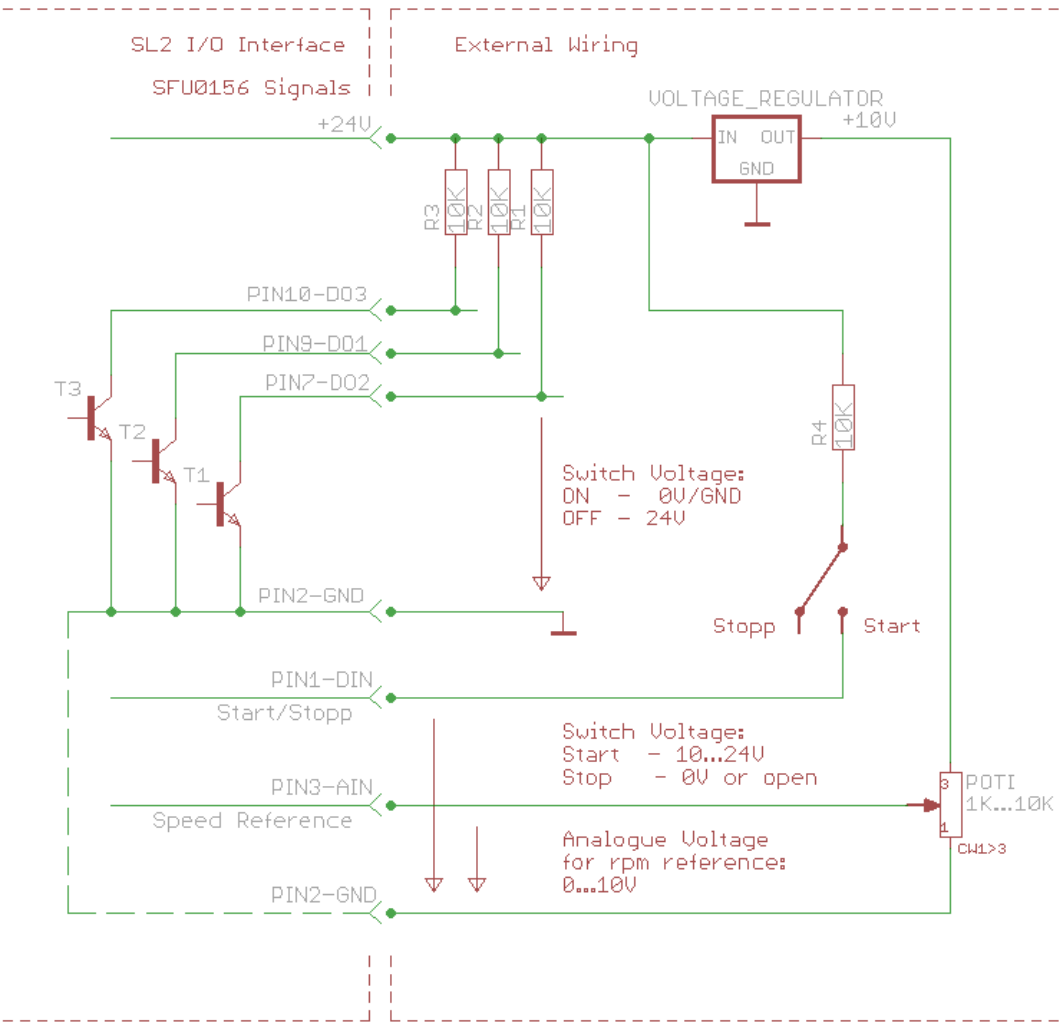

Example for wiring the I/O Interface

A successful start of the spindle the analogue voltage at PIN3 as reference for the duty speed hast be higher than the minimum voltage (→ 5.2).
With using a potentiometer for dialing the rotational speed it should be wired to 10V, so that the required range from 0…10V can be covered, representing the speed range.

8. Safety Functions

The following safety functions bring about controlled stop of the spindle according predefined deceleration times:

- ✓ Safety stop because of converter excess temperature after delay-time of 10s is exceeded
- ✓ Safety stop by overload and time delay exceeded (default 10sec)
- ✓ Safety stop will occur immediately by exceeding the maximum admissible spindle current.

9. EMC (electromagnetic compatibility)

The compliance with the limit values of EMC is the responsibility of the manufacturer of the machine or device.

This device was developed for use in industrial environments. For trouble-free operation and to reduce emitted interference, the following should be observed during wiring of the equipment:

- ✓ The EMC of a machine or device is affected by all connected components (motor spindle, length and type of cables, wiring, etc..). Under certain conditions the use of additional filters can be necessary to maintain the current laws.
- ✓ The earth and shield connections of all those devices used in conjunction with the frequency converter should be as short as possible and have as large a cross-section as possible.
- ✓ Control devices used with the frequency converter (PLC, CNC, IPC, ...) should be connected to a common earth/earth terminal bar
- ✓ All connections both to and from the frequency converter should be via shielded cable.
- ✓ Supply cables, motor cables and control cables must be completely isolated from each other. Where crossing cannot be avoided, cables should be laid at 90° to each other.
- ✓ The control cable should be laid as far away as possible from the load cable.

10. Power Supply Set (as Option)

As option a power supply set is available, consisting of a switched mode power supply for the 48V and a DCDC voltage converter for the 24V supply. With the help of this set it is possible, to generate the required DC-supply voltages for the SFU0156.

48V Power Supply for Spindle Voltage Supply

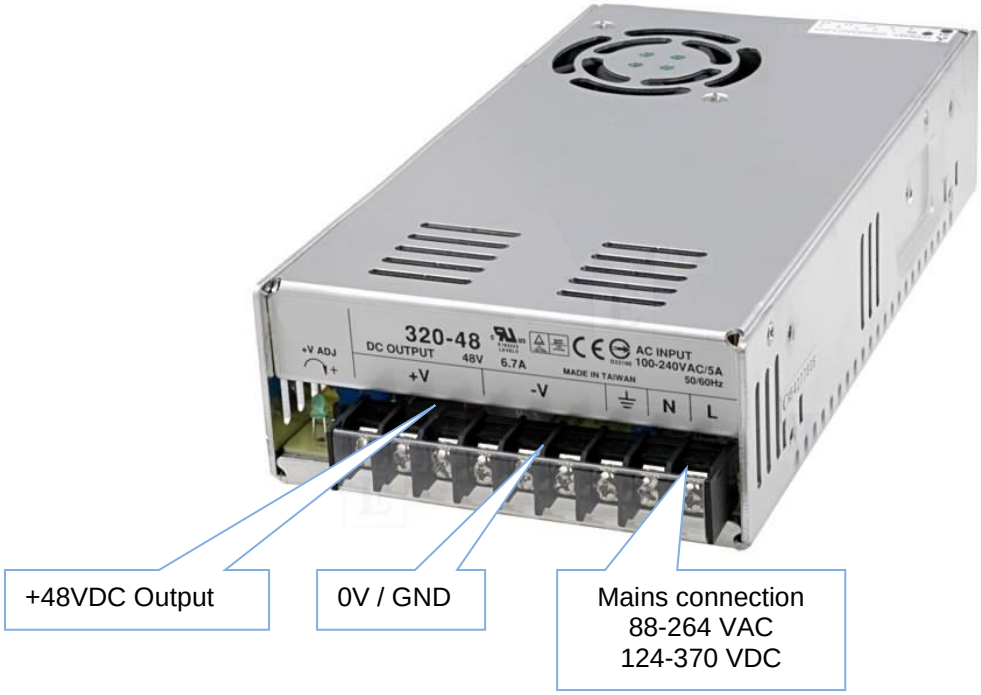

Dimension (WxHxD in mm): 115x50x216

24V DC-DC Voltage Converter as separate solution

This DC-DC voltage converter generates the voltage for the 24V logic supply directly from the spindle voltage. It has a wide band input range and a regulated 24V output.

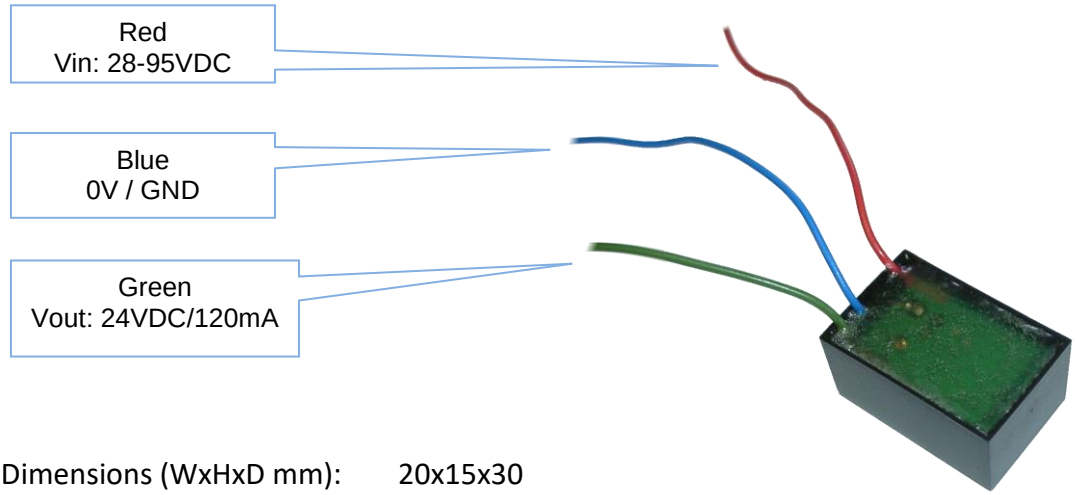

Dimensions (WxHxD mm): 20x15x30
Cable length: 160 mm

Connection Diagram of Power Supply with 48V Power Supply

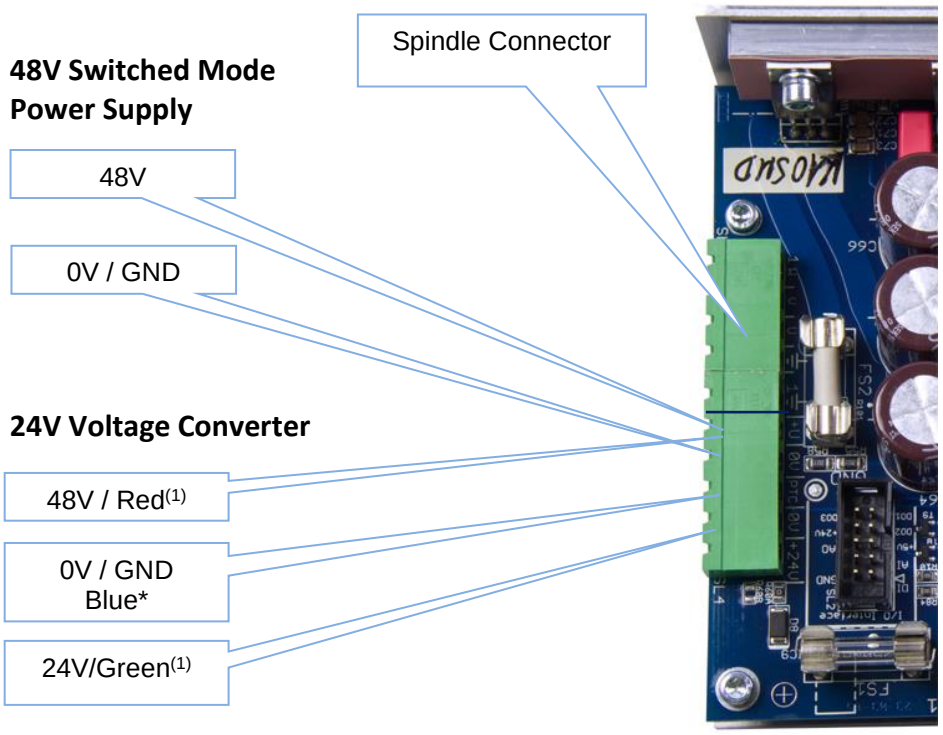

1) Cable Colours oft he 24V Voltage Converter

Version with onboard +24V logic supply

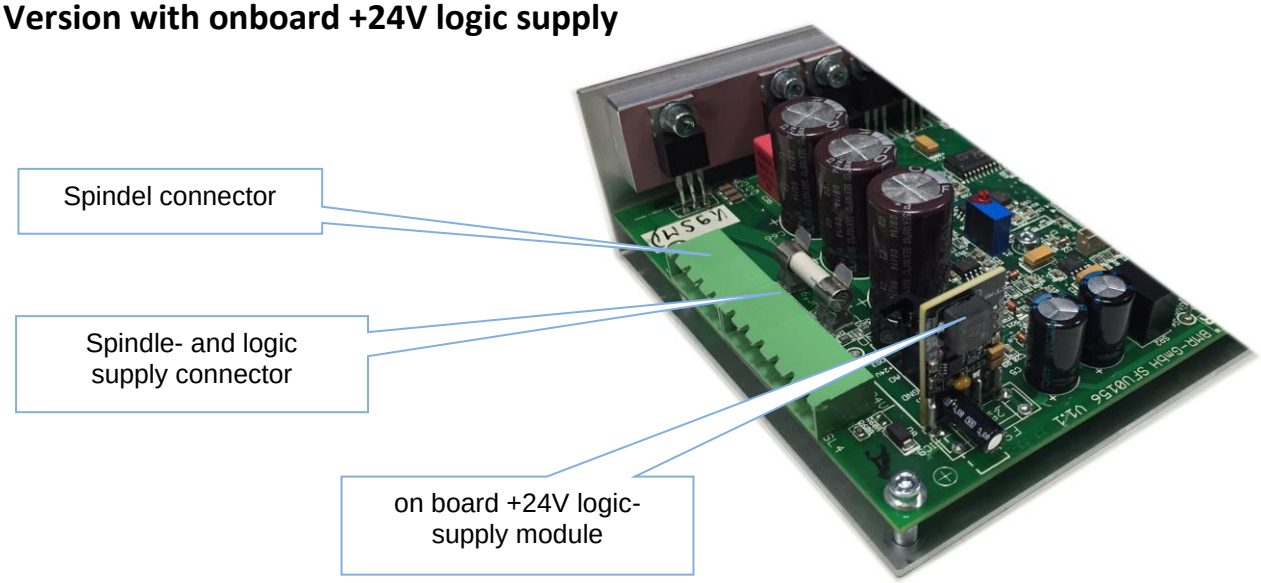

Attention:

All these works handle with dangerous voltage and have to be carried out by skilled persons only.

Please verify before connecting that the supply voltage is switched off!

11. SFU 0156 with Remote Controller

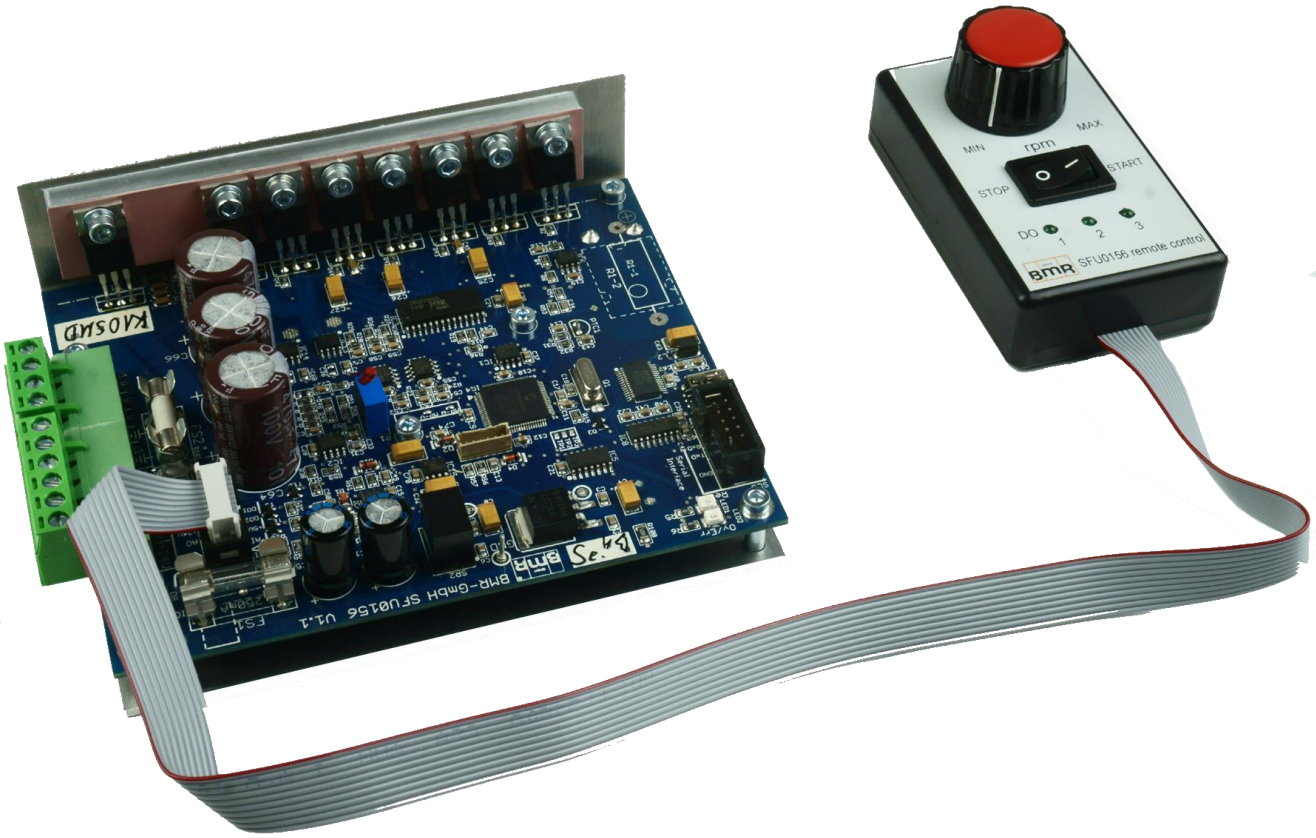

✓ On option a remote controller is available which can directly be connected with the I/O interface at SL2.
By this, the required duty speed can be adjusted with a potentiometer and the converter can be started and stopped with a rocker switch.
The status of the digital outputs is indicated on LEDs.

✓ All required voltages are generated within this adapter, so the converter can be controlled and tested very easily.
A quick test and setting into action of the converter becomes possible even without external control signals.

12. Drawing and Mounting

For mounting purpose there are 6 nuts with a 3mm thread provided, being pressed into the at the bottom side of mounting bracket.

Top view

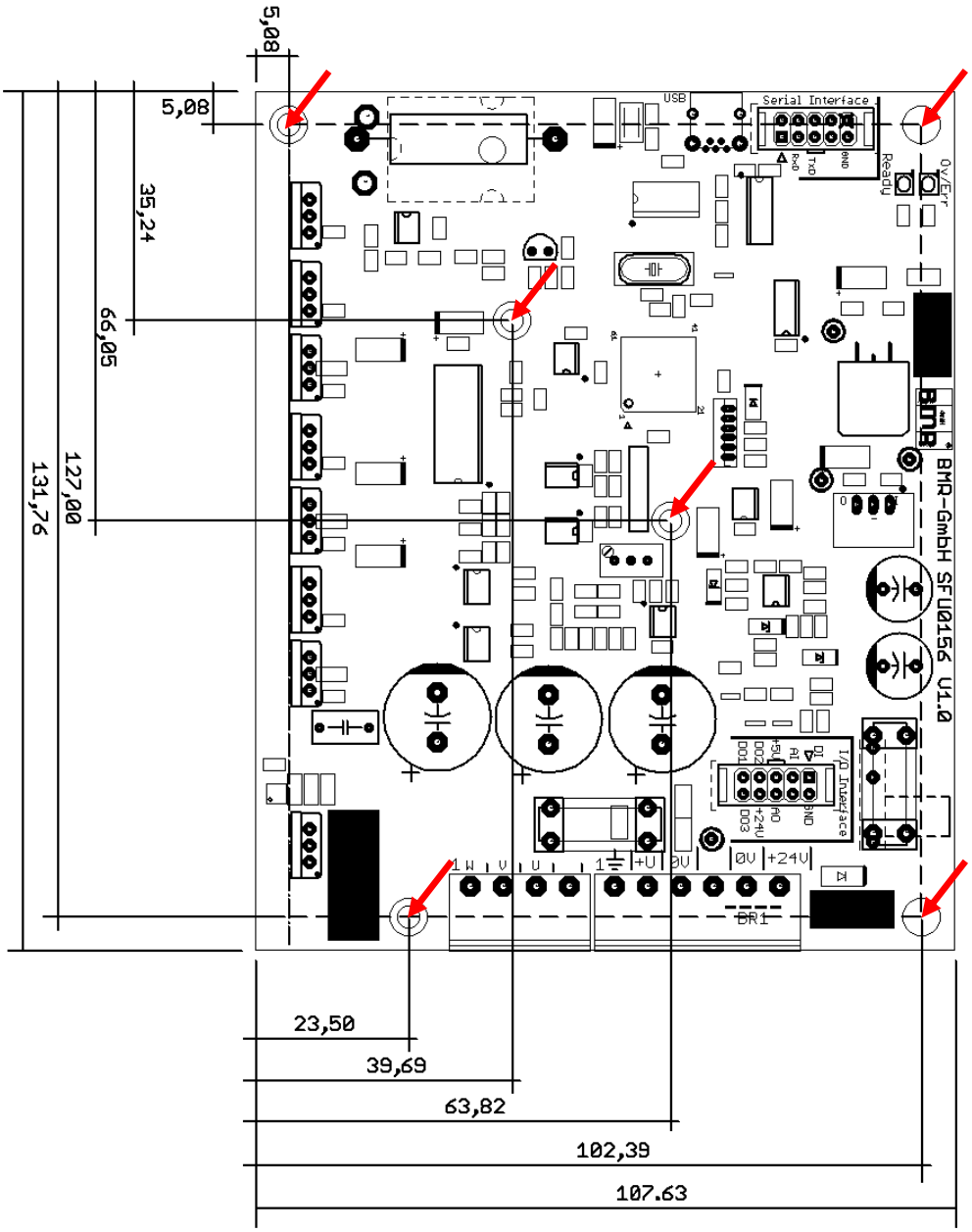

Side view

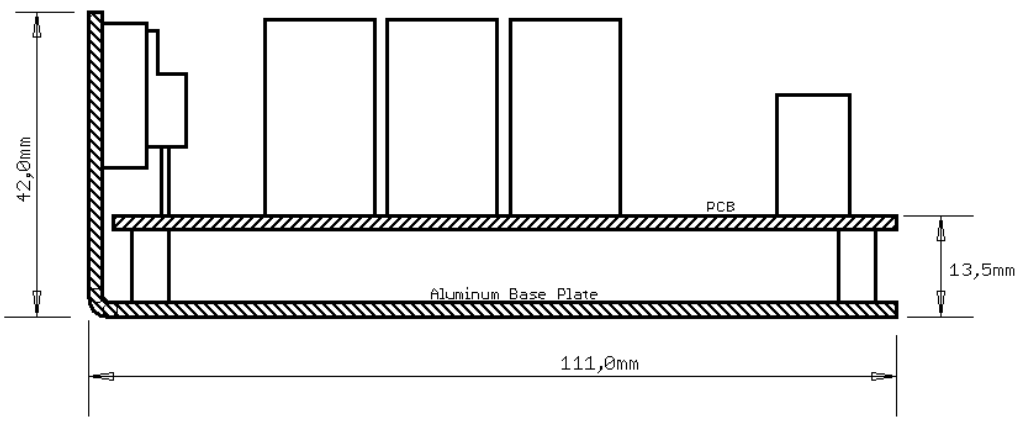

A DIN rail mounting according to EN 50022 (35mm x 7.5mm)
is provided for mounting of the SSE version.

Bottom view

Front view

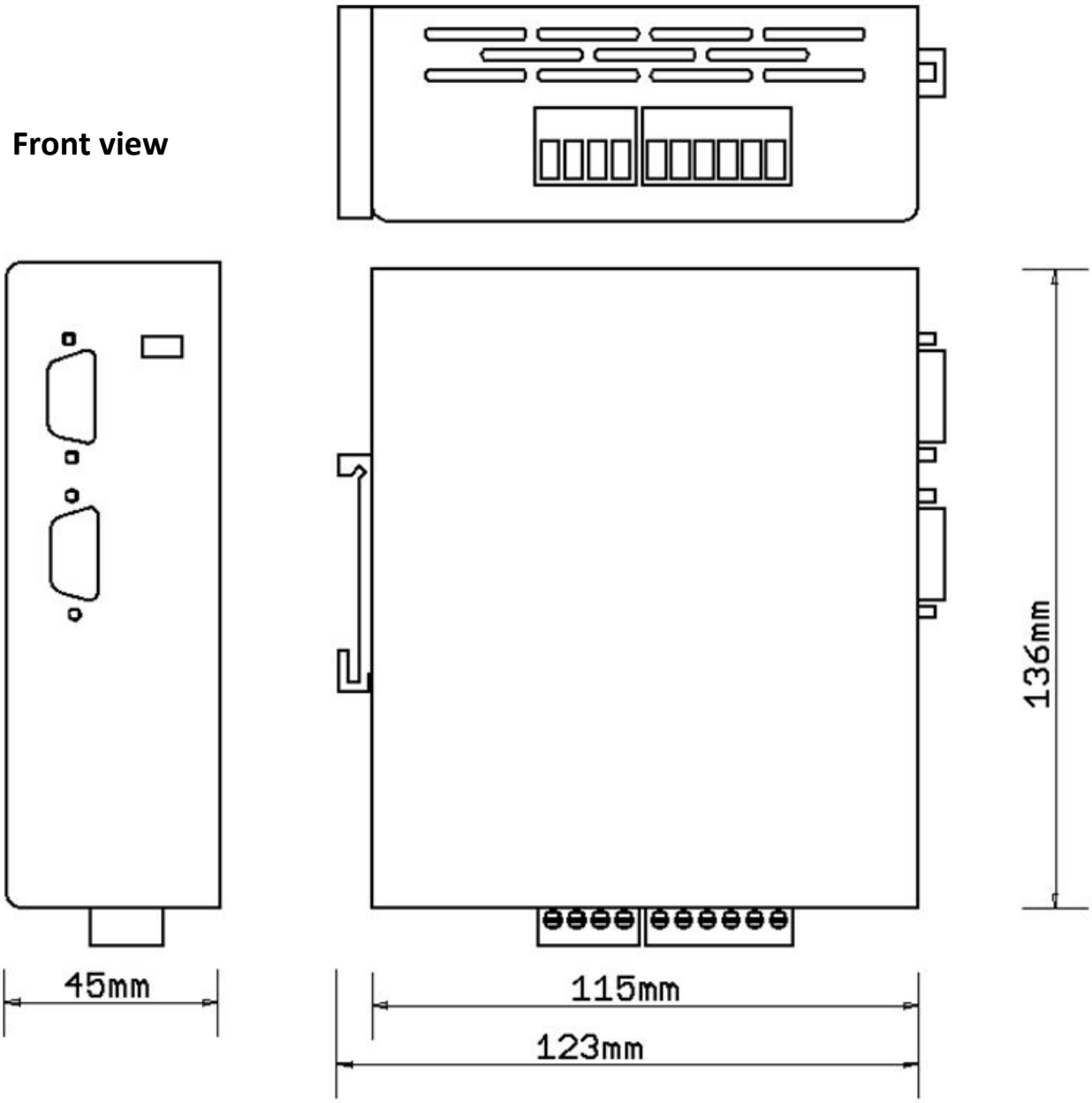

OUR QUALITY COMMITMENT

100%	„Made in Germany“
100%	precision
100%	reliability
100%	support
100%	flexibility

Subject to technical alterations.
December 2019

www.bmr-gmbh.de

ANSPRECHPARTNER
CONTACT

FON +49 9122 / 631 48 - 0
FAX +49 9122 / 631 48 - 29

BMR GmbH
elektrischer & elektronischer Gerätebau

Walpersdorfer Straße 38
91126 Schwabach

E-Mail info@bmr-gmbh.de
Homepage www.bmr-gmbh.de

GESCHÄFTSFÜHRUNG
MANAGEMENT

Susanne Brittling
s.brittling@bmr-gmbh.de

Stephan Brittling
stephan.brittling@bmr-gmbh.de

ENTWICKLUNGSABTEILUNG
DEVELOPMENT DEPARTMENT

entwicklung@bmr-gmbh.de

EINKAUF
PURCHASE

Anja Lämmermann
a.laemmermann@bmr-gmbh.de

VERTRIEB
SALES

Michael Lämmermann
m.laemmermann@bmr-gmbh.de

Annette Farbulleh
a.farbulleh@bmr-gmbh.de